3/8"&1/4" Baby Butterfly IMPACT WRENCH

EXPLODED VIEW

SP-1850 (3/8")
SP-1850S (1/4")

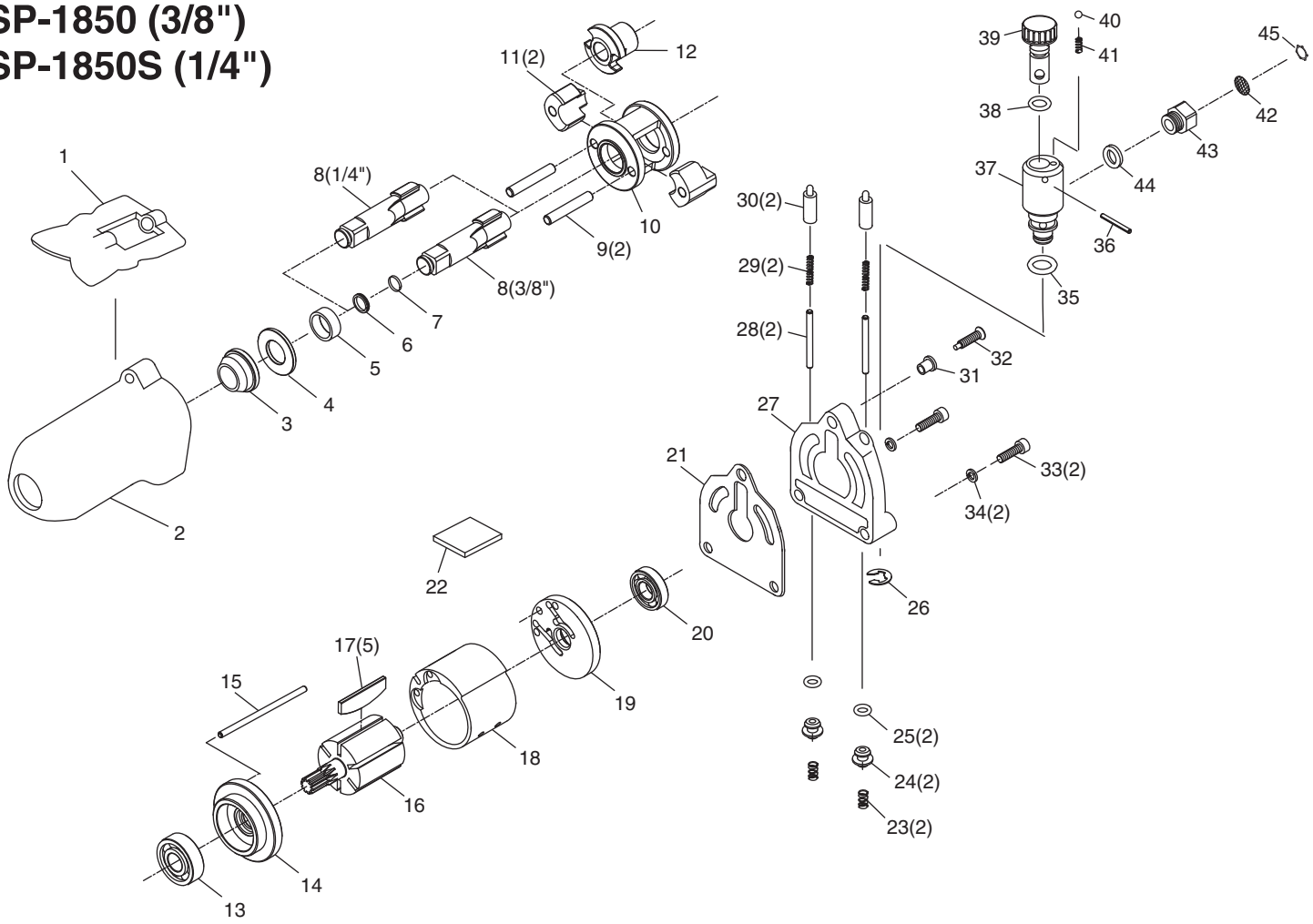

PARTS LIST

Index No.	Parts No.	Description	Qty. Per tool
1	850-01	Throttle Lever	1
2	850-02	Motor Housing	1
3	850-03	Housing Bushing	1
4	850-04	Spacer	1
5	850-05	Hammer Cage Bushing	1
6	850-06	Socket Ret. Ring (for 3/8")	1
7	850-07	O-Ring (for 3/8")	1
8	850-08	Anvil Shank (3/8")	1
	850S-08	Anvil Shank (1/4")	1
9	850-09	Hammer Cage Pin	2
10	850-10	Hammer Cage	1
11	850-11	Hammer	2
12	850-12	Cam	1
13	850-13	Ball Bearing	1
14	850-14	Front End Plate	1
15	850-15	Motor Pin	1
16	850-16	Rotor	1
17	850-17	Rotor Blade	5
18	850-18	Cylinder	1
19	850-19	Rear End Plate	1
20	850-20	Ball Bearing	1
21	850-21	Gasket	1
22	850-22	Silencer	1
23	850-23	Valve Spring	2
24	850-24	Throttle Valve	2
25	850-25	O-Ring	2
26	850-26	Retainer Ring	1
27	850-27	Valve Housing	1
28	850-28	Throttle Pin	2

Index No.	Parts No.	Description	Qty. Per tool
29	850-29	Throttle Spring	2
30	850-30	Throttle Plunger	2
31	850-31	Lever Bushing	1
32	850-32	Throttle Lever Bolt	1
33	850-33	Cap Screw	2
34	850-34	Spring Washer	2
35	850-35	O-Ring	1
36	850-36	Spring Pin	1
37	850-37	Regulator Bushing	1
38	850-38	O-Ring	2
39	850-39	Regulator	1
40	850-40	Steel Ball	1
41	850-41	Regulator Spring	1
42	850-42	Screen	1
43	850-43	Inlet Bushing	1
44	850-44	Washer	1
45	850-45	Circular Internal Nut	1

The types and specifications may be changed without notice.