1/2" SQ.DR. IMPACT WRENCH

EXPLODED VIEW

SP-7144

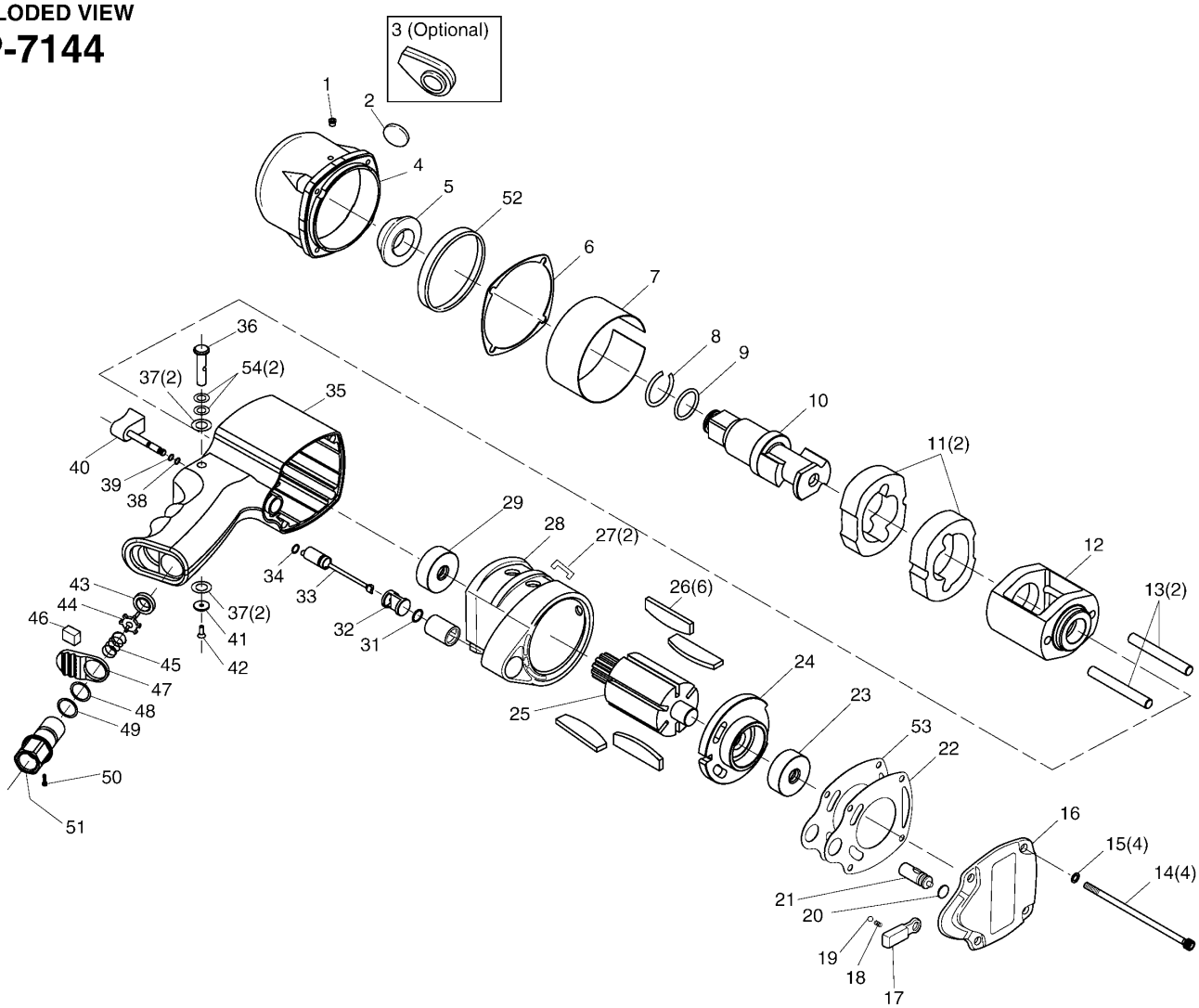

PARTS LIST

Index No.	Parts No.	Description	Qty. Per tool
1	7144-01	Grease Fitting	1
2	7144-02	Plate	1
3	7144-03	LED Light Unit (Optional)	1
4	7144-04	Hammer Case	1
5	7144-05	Spindle Bush	1
6	7144-06	Hammer Case Gasket	1
7	7144-07	Sleeve	1
8	7144-08	Retainer Ring	1
9	7144-09	O-Ring	1
10	7144-10	Spindle	1
11	7144-11	Hammer	2
12	7144-12	Hammer Frame	1
13	7144-13	Hammer Pin	2
14	7144-14	Hex. Bolt	4
15	7144-15	Washer	4
16	7144-16	Housing Cap	1
17	7144-17	Regulator Lever	1
18	7144-18	Spring	1
19	7144-19	Steel Ball	1
20	7144-20	O-Ring	1
21	7144-21	Regulator	1
22	7144-22	Gasket	1
23	7144-23	Ball Bearing	1
24	7144-24	Rear End Plate	1
25	7144-25	Rotor	1
26	7144-26	Rotor Blade	6
27	7144-27	Cylinder Cap	2
28	7144-28	Cylinder	1
29	7144-29	Ball Bearing	1

Index No.	Parts No.	Description	Qty. Per tool
31	7144-31	O-Ring	1
32	7144-32	Reverse Valve	1
33	7144-33	Reverse Shaft	1
34	7144-34	O-Ring	1
35	7144-35	Housing	1
36	7144-36	Reverse Button	1
37	7144-37	Cushion Ring	2
38	7144-38	O-Ring	1
39	7144-39	O-Ring	1
40	7144-40	Trigger	1
41	7144-41	Washer	1
42	7144-42	Torx. Screw	1
43	7144-43	Valve Seat	1
44	7144-44	Valve	1
45	7144-45	Valve Spring	1
46	7144-46	Muffler Form	1
47	7144-47	Deflector	1
48	7144-48	O-Ring	1
49	7144-49	O-Ring	1
50	7144-50	Hex. Screw	1
51	7144-51	Inlet Bushing	1
52	7144-52	Plastic Ring	1
53	7144-53	Gasket	1
54	7144-54	O-Ring	2

The types and specifications may be changed without notice.