1/4" AIR DIE GRINDER

EXPLODED VIEW

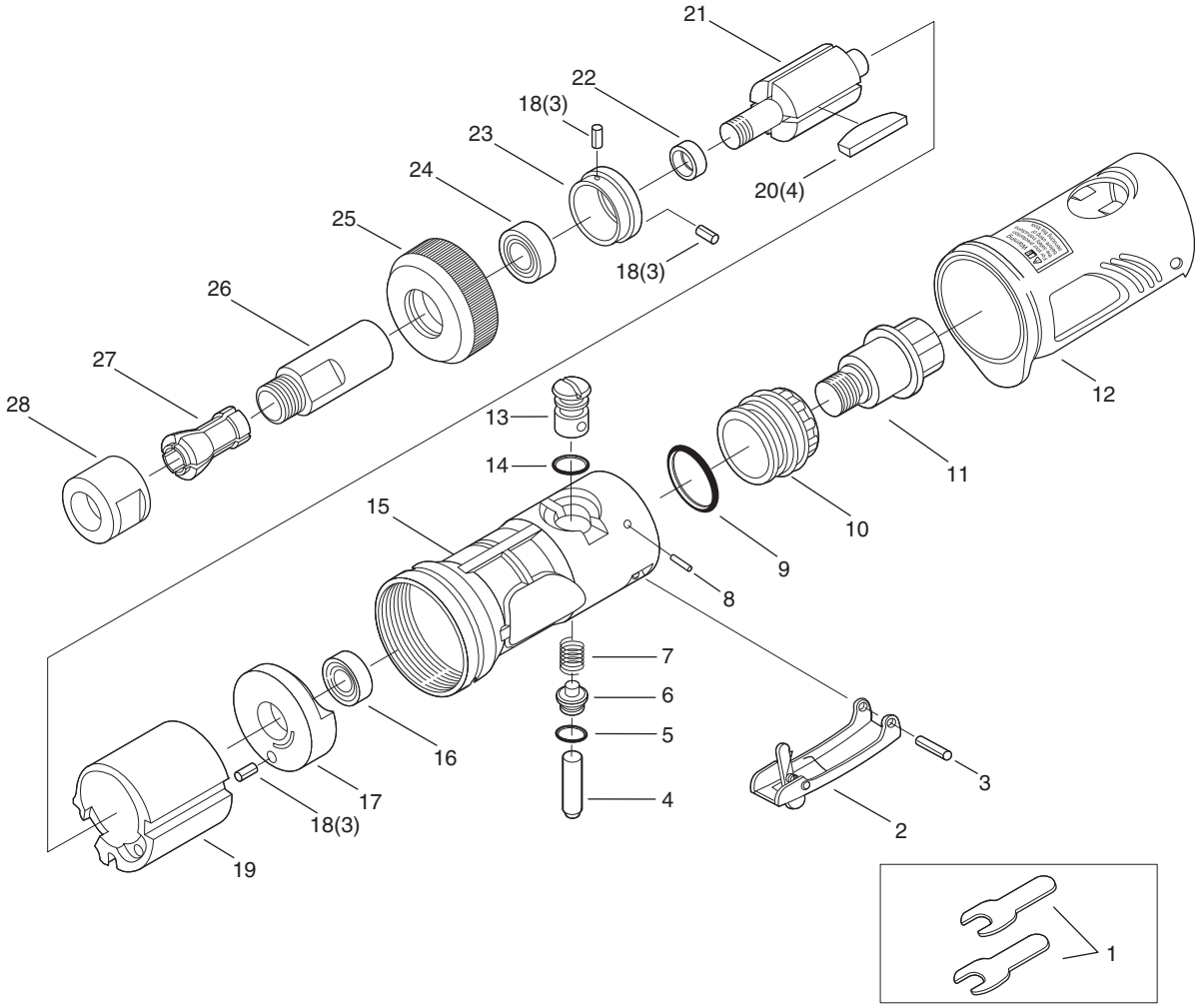

PARTS LIST

Index No.	Parts No.	Description	Qty. Per tool
1	7220-01	Spanner Wrench Set	1
2	7220-02	Safety Lever	1
3	7220-03	Spring Pin	1
4	7220-04	Valve Shaft	1
5	7220-05	O-Ring	1
6	7220-06	Throttle Valve	1
7	7220-07	Valve Spring	1
8	7220-08	Spring Pin	1
9	7220-09	O-Ring	1
10	7220-10	Exhaust Sleeve	1
11	7220-11	Inlet Bushing	1
12	7220-12	Housing Cover	1
13	7220-13	Air Regulator	1
14	7220-14	O-Ring	1
15	7220-15	Motor Housing	1
16	7220-16	Ball Bearing	1
17	7220-17	Rear End Plate	1
18	7220-18	Spring Pin	3
19	7220-19	Cylinder	1
20	7220-20	Rotor Blade	4
21	7220-21	Rotor	1
22	7220-22	Bearing Spacer	1
23	7220-23	Front End Plate	1
24	7220-24	Ball Bearing	1
25	7220-25	Lock Ring	1
26	7220-26	Spindle	1
27	7220-27	Collet (1/4")	1
28	7220-28	Collet Nut	1

Index No.	Parts No.	Description	Qty. Per tool

The types and specifications may be changed without notice.
7220 201203S