# CUT - OFF TOOL

## EXPLODED VIEW

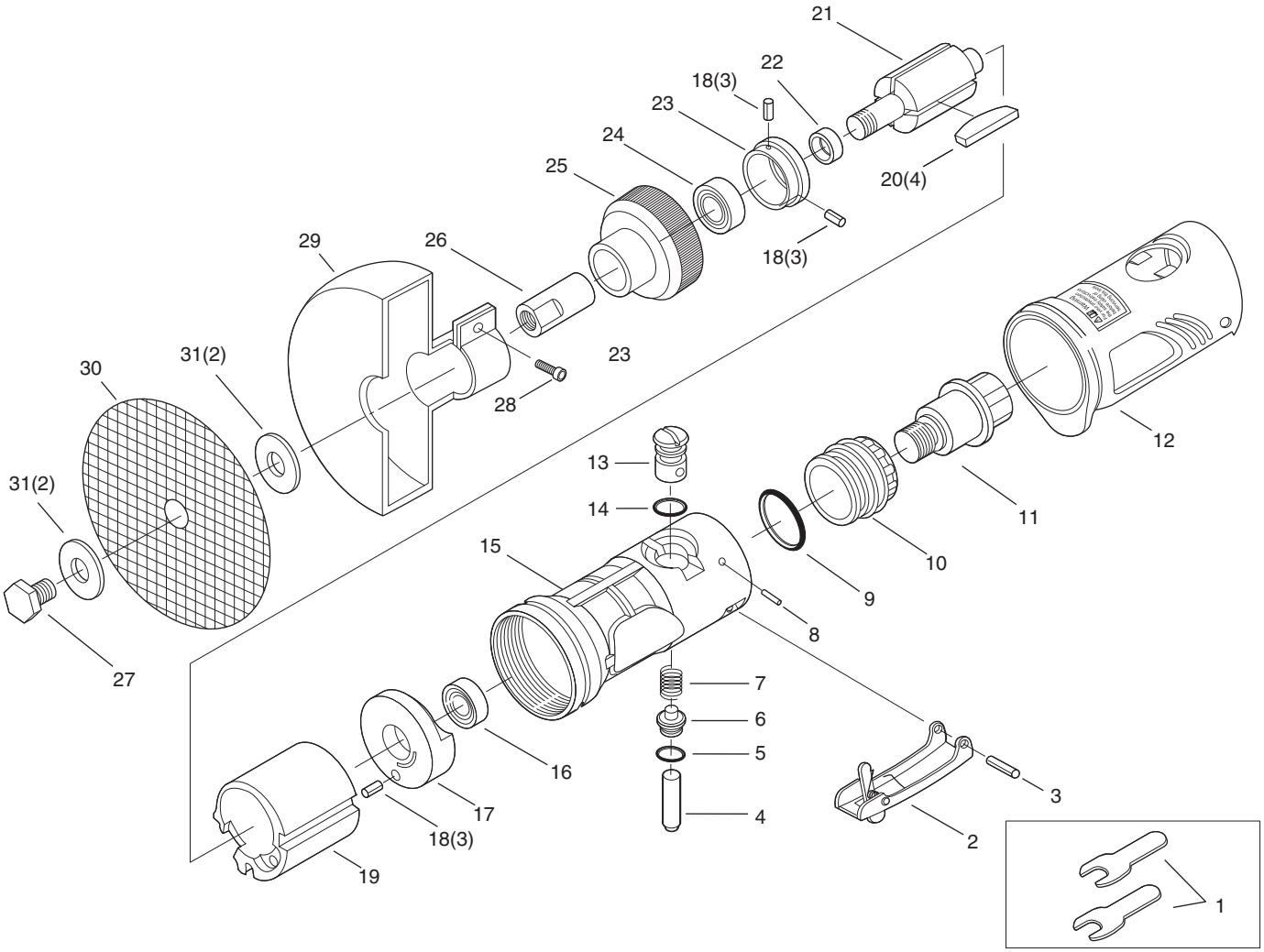


## PARTS LIST

| Index No. | Parts No. | Description | Qty. Per tool |
|---|---|---|---|
| 1 | 7230-01 | Spanner Wrench Set | 1 |
| 2 | 7230-02 | Safety Lever | 1 |
| 3 | 7230-03 | Spring Pin | 1 |
| 4 | 7230-04 | Valve Shaft | 1 |
| 5 | 7230-05 | O-Ring | 1 |
| 6 | 7230-06 | Throttle Valve | 1 |
| 7 | 7230-07 | Valve Spring | 1 |
| 8 | 7230-08 | Spring Pin | 1 |
| 9 | 7230-09 | O-Ring | 1 |
| 10 | 7230-10 | Exhaust Sleeve | 1 |
| 11 | 7230-11 | Inlet Bushing | 1 |
| 12 | 7230-12 | Housing Cover | 1 |
| 13 | 7230-13 | Air Regulator | 1 |
| 14 | 7230-14 | O-Ring | 1 |
| 15 | 7230-15 | Motor Housing | 1 |
| 16 | 7230-16 | Ball Bearing | 1 |
| 17 | 7230-17 | Rear End Plate | 1 |
| 18 | 7230-18 | Spring Pin | 3 |
| 19 | 7230-19 | Cylinder | 1 |
| 20 | 7230-20 | Rotor Blade | 4 |
| 21 | 7230-21 | Rotor | 1 |
| 22 | 7230-22 | Bearing Spacer | 1 |
| 23 | 7230-23 | Front End Plate | 1 |
| 24 | 7230-24 | Ball Bearing | 1 |
| 25 | 7230-25 | Lock Ring | 1 |
| 26 | 7230-26 | Spindle | 1 |
| 27 | 7230-27 | Hex. Bolt | 1 |
| 28 | 7230-28 | Cap Screw | 1 |
| 29 | 7230-29 | Wheel Cover | 1 |

| Index No. | Parts No. | Description | Qty. Per tool |
|---|---|---|---|
| 30 | 7230-30 | Cutting Wheel | 1 |
| 31 | 7230-31 | Wheel Washer | 2 |

The types and specifications may be changed without notice.
7230 201203S