MINI BEVELER

EXPLODED VIEW

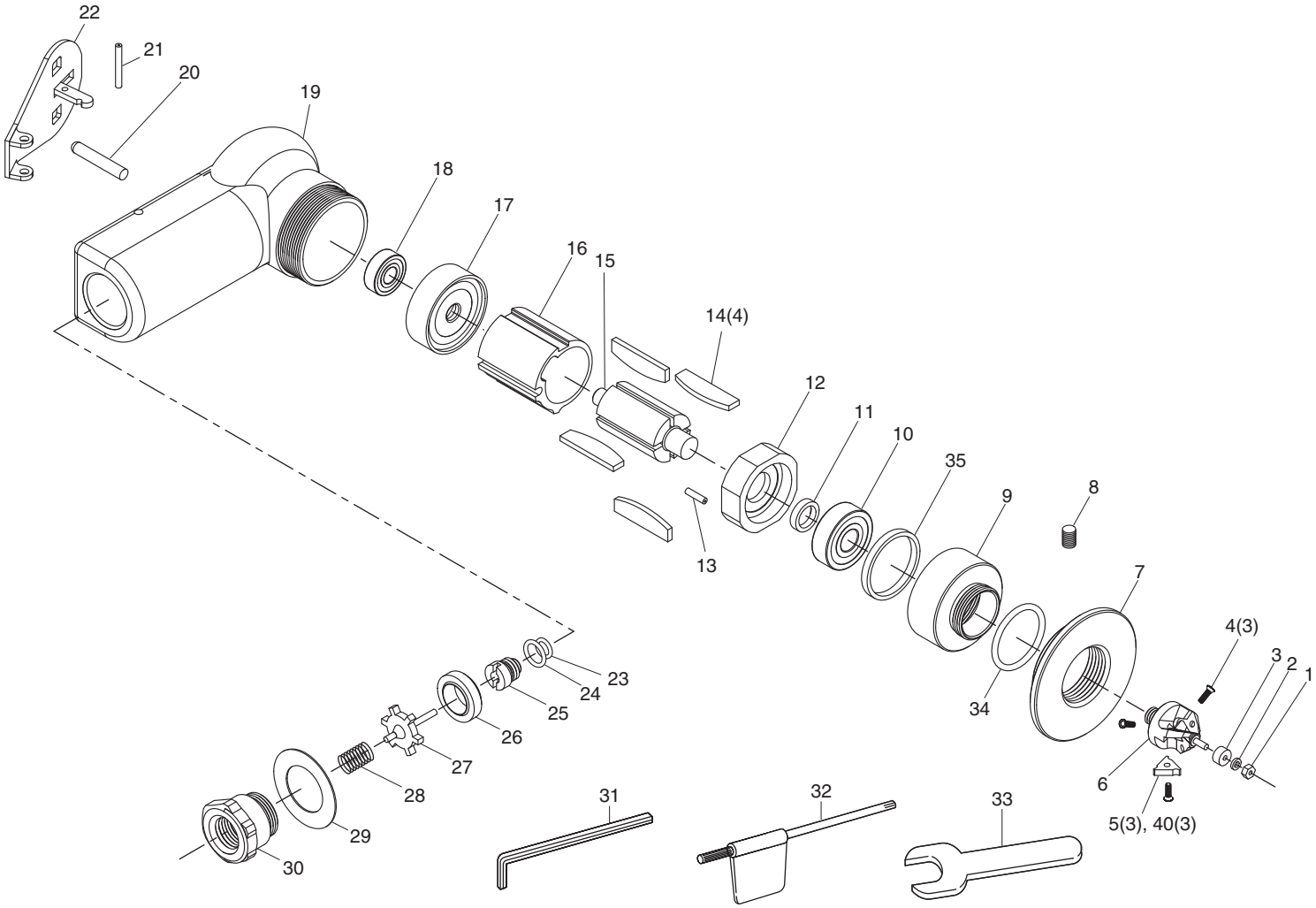

PARTS LIST

Index No.	Parts No.	Description	Qty. Per tool
1	7252F-01	Hex. Nut	1
2	7252F-02	Spring Washer	1
3	7252F-03	Ball Bearing	1
4	7252F-04	Cutter Bolt	3
5	7252F-05	Cutter (252-C1.5 1set 10pcs)	3
6	7252F-06	Cutter Holder	1
7	7252F-07	Flange	1
8	7252F-08	Screw	1
9	7252F-09	Lock Ring	1
10	7252F-10	Ball Bearing	1
11	7252F-11	Collar	1
12	7252F-12	Front Plate	1
13	7252F-13	Roll Pin	1
14	7252F-14	Rotor Blade	4
15	7252F-15	Rotor	1
16	7252F-16	Cylinder	1
17	7252F-17	Rear Plate	1
18	7252F-18	Ball Bearing	1
19	7252F-19	Body	1
20	7252F-20	Valve Shaft	1
21	7252F-21	Roll Pin	1
22	7252F-22	Safety Lever	1
23	7252F-23	O-Ring	1
24	7252F-24	O-Ring	1
25	7252F-25	Inner Bolt	1
26	7252F-26	Valve Seat	1
27	7252F-27	Valve	1
28	7252F-28	Valve Spring	1
29	7252F-29	Rear Gasket	1

Index No.	Parts No.	Description	Qty. Per tool
30	7252F-30	Inlet Bushing	1
31	7252F-31	Hex. Wrench	1
32	7252F-32	Flat Torx Wrench	1
33	7252F-33	Spanner Wrench	1
34	7252F-34	O-Ring	1
35	7252F-35	Lock Washer	1
40	7252F-40	Cutter (252-R1.5 1set 10pcs)	3

The types and specifications may be changed without notice.