1"SQ.DR. IMPACT WRENCH

EXPLODED VIEW

SP-1193GE-6

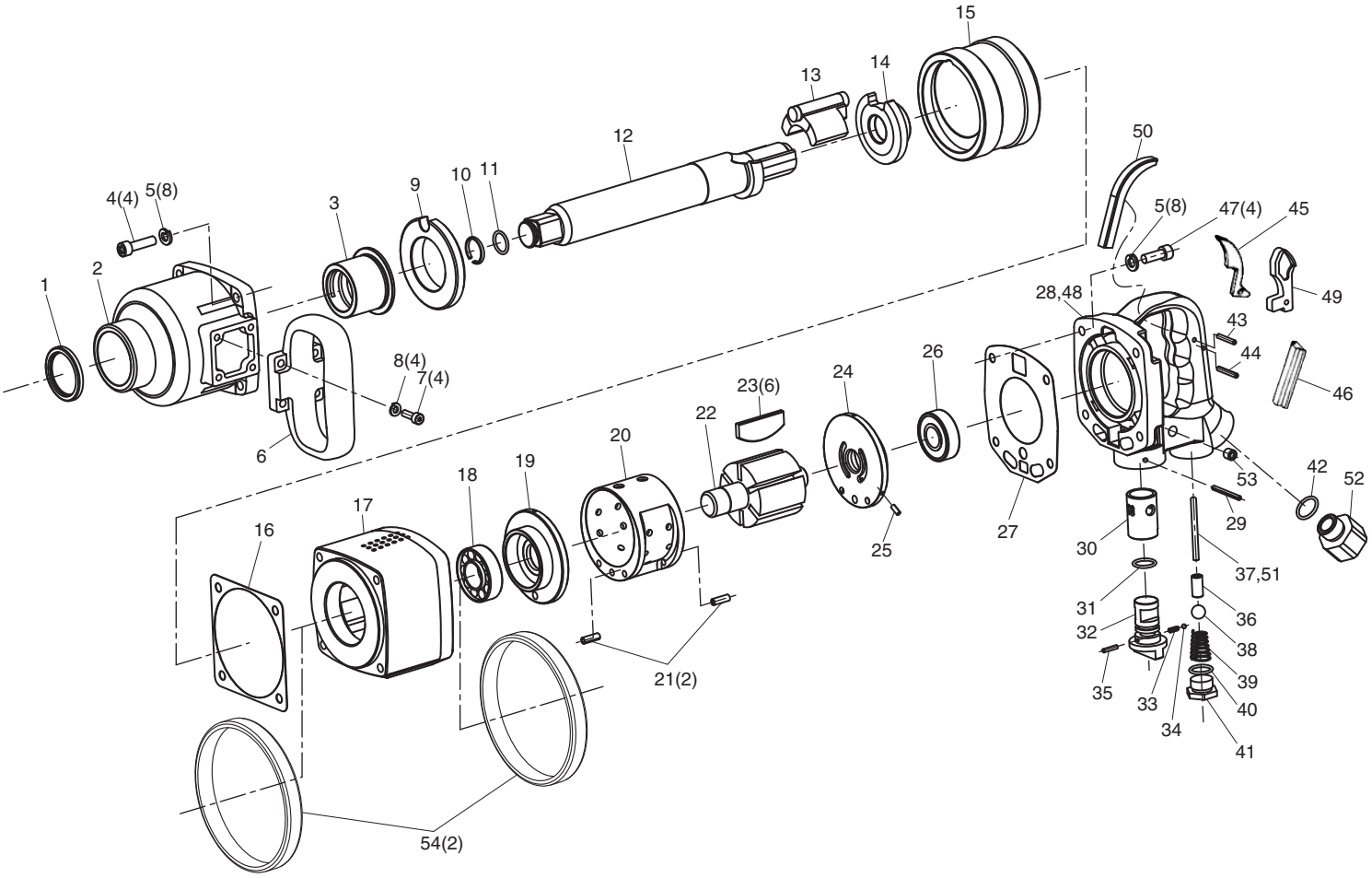

PARTS LIST

Index No.	Parts No.	Description	Qty. Per tool
1	193GE-01	Oil Seal	1
2	193GE-02	Hammer Case (Incl:1,3)	1
3	193GE-03	Fixed Bush	1
4	193GE-04	Hex. Socket Bolt	4
5	193GE-05	Spring Washer	8
6	193GE-06	D-Type Handle	1
7	193GE-07	Hex. Socket Bolt	4
8	193GE-08	Spring Washer	4
9	193GE-09	Side Plate	1
10	193GE-10	Retainer Ring	1
11	193GE-11	O-Ring	1
12	193GE-12	Anvil (6"Long)	1
13	193GE-13	Hammer	1
14	193GE-14	Cam	1
15	193GE-15	Hammer Frame	1
16	193GE-16	Hammer Case Packing	1
17	193GE-17	Motor Housing	1
18	193GE-18	Ball Bearing	1
19	193GE-19	Front End Plate	1
20	193GE-20	Cylinder	1
21	193GE-21	Spring Pin	2
22	193GE-22	Rotor	1
23	193GE-23	Rotor Blade	6
24	193GE-24	Rear End Plate	1
25	193GE-25	Spring Pin	1
26	193GE-26	Ball Bearing	1
27	193GE-27	Motor Case Packing	1
28	193GE-28	Handle Frame Assy (Incl:30,35)	1
29	193GE-29	Spring Pin	1
30	193GE-30	Reverse Bushing	1
31	193GE-31	O-Ring	1

Index No.	Parts No.	Description	Qty. Per tool
32	193GE-32	Reverse Valve	1
33	193GE-33	Spring	1
34	193GE-34	Steel Ball	1
35	193GE-35	Spring Pin	1
36	193GE-36	Valve Shaft Bushing	1
37	193GE-37	Valve Shaft Inside	1
38	193GE-38	Valve	1
39	193GE-39	Valve Spring	1
40	193GE-40	O-Ring	1
41	193GE-41	Valve Plug	1
42	193GE-42	O-Ring	1
43	193GE-43	Spring Pin	1
44	193GE-44	Spring Pin	1
45	193GE-45	Throttle Lever Inside	1
46	193GE-46	Rubber Guard Inside	1
47	193GE-47	Hex. Socket Bolt	4
48	193GE-48	Handle Frame Assy (Incl:30,35)	1
49	193GE-49	Throttle Lever Outside	1
50	193GE-50	Rubber Guard Outside	1
51	193GE-51	Valve Shaft Outside	1
52	193GE-52	Inlet Bushing	1
53	193GE-53	Oil Plug	1
54	193GE-54	Housing Band	2

The types and specifications may be changed without notice.