3/8" SQ. DR. FLAT HEAD RATCHET WRENCH

EXPLODED VIEW

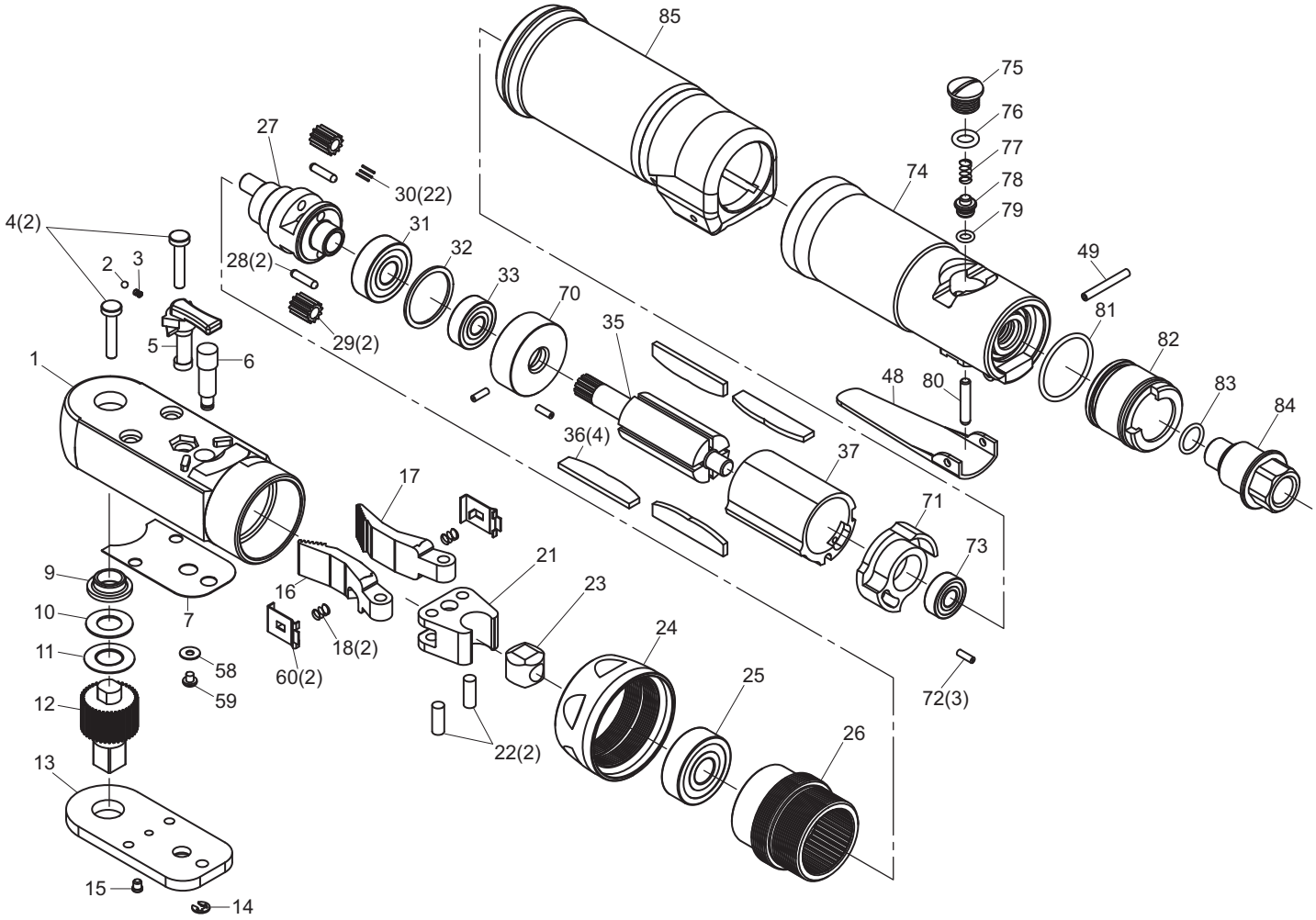

PARTS LIST

Index No.	Parts No.	Description	Qty. Per tool
1	7786-01	Ratchet Housing	1
2	7786-02	Steel Ball	1
3	7786-03	Regulator Spring	1
4	7786-04	Head Cap Screw	2
5	7786-05	Reverse Shaft	1
6	7786-06	Pivot Pawl	1
7	7786-07	Wear Plate	1
9	7786-09	Bushing	1
10	7786-10	Friction Washer	1
11	7786-11	Belleville Washer	1
12	7786-12	Ratchet Anvil (3/8”)	1
13	7786-13	Cover Plate (3/8”)	1
14	7786-14	E-Ring	1
15	7786-15	Grease Fitting	1
16	7786-16	Ratchet R	1
17	7786-17	Ratchet L	1
18	7786-18	Ratchet Spring	2
21	7786-21	Ratchet Yoke	1
22	7786-22	Ratchet Pin	2
23	7786-23	Drive Bushing	1
24	7786-24	Clamp Nut	1
25	7786-25	Ball Bearing	1
26	7786-26	Internal Gear	1
27	7786-27	Crank Spindle	1
28	7786-28	Idle Gear Pin	2
29	7786-29	Idle Gear	2
30	7786-30	Needle Roller	22
31	7786-31	Ball Bearing	1
32	7786-32	Lock Washer	1
33	7786-33	Ball Bearing	1

Index No.	Parts No.	Description	Qty. Per tool
35	7786-35	Rotor	1
36	7786-36	Rotor Blade	4
37	7786-37	Cylinder	1
48	7786-48	Throttle Lever	1
49	7786-49	Spring Pin	1
58	7786-58	Washer	1
59	7786-59	Screw	1
60	7786-60	Spring Base	1
70	7780-70	Front End Plate	1
71	7780-71	Rear End Plate	1
72	7780-72	Spring Pin	3
73	7780-73	Ball Bearing	1
74	7780-74	Motor Housing	1
75	7780-75	Valve Nut	1
76	7780-76	O-Ring	1
77	7780-77	Valve Spring	1
78	7780-78	Valve	1
79	7780-79	O-Ring	1
80	7780-80	Valve Shaft	1
81	7780-81	O-Ring	1
82	7780-82	Exhaust Sleeve	1
83	7780-83	O-Ring	1
84	7780-84	Inlet Bushing	1
85	7780-85	Housing Cover	1

The types and specifications may be changed without notice.