AIR HAMMER

EXPLODED VIEW

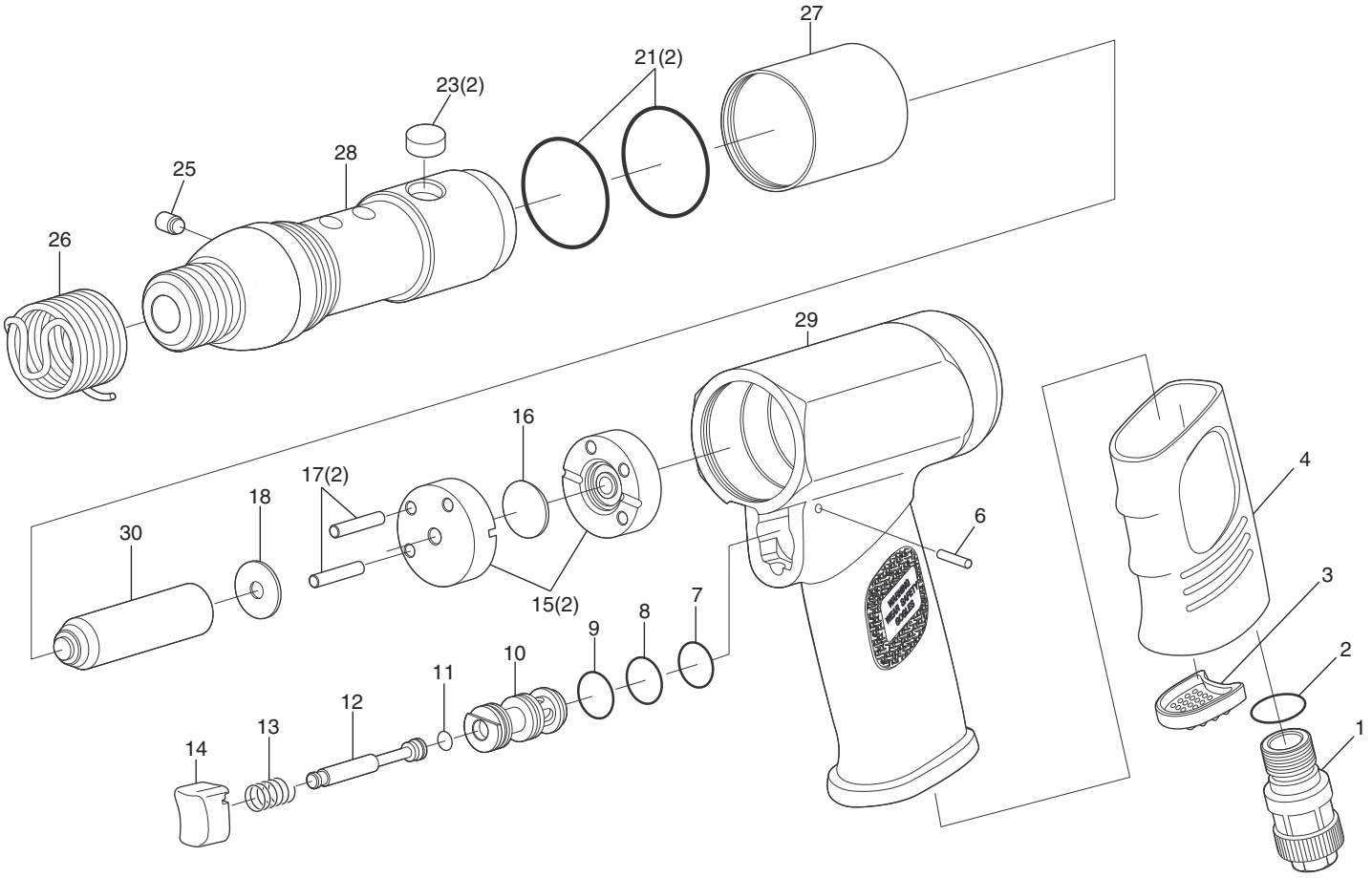

PARTS LIST

Index No.	Parts No.	Description	Qty. Per tool
1	400-01	Regulator	1
2	400-02	O-Ring	1
3	400-03	Deflector	1
4	400-04	Handle Cover	1
6	400-06	Spring Pin	1
7	400-07	O-Ring	1
8	400-08	O-Ring	1
9	400-09	O-Ring	1
10	400-10	Valve Bushing	1
11	400-11	O-Ring	1
12	400-12	Valve Shaft	1
13	400-13	Valve Spring	1
14	400-14	Trigger	1
15	400-15	Valve Body	2
16	400-16	Valve	1
17	400-17	Spring Pin	2
18	400-18	Cylinder Washer	1
21	400-21	O-Ring	2
23	400-23	Cylinder Lock Plug	2
25	400-25	Plug	1
26	400-26	Quick Change Retainer	1
27	405-27	Cylinder Sleeve	1
28	405-28	Cylinder (Short Type)	1
29	405-29	Housing Body	1
30	405-30	Piston	1

Index No.	Parts No.	Description	Qty. Per tool

The types and specifications may be changed without notice.

1405 201407S